PUBLISHED: 21-NOV-2016
2017.0 DISCOVERY (LR), 308-07

TRANSFER CASE - [+] TWIN SPEED TRANSFER CASE

TRANSFER CASE DRAINING AND FILLING (G1970980)

GENERAL PROCEDURES

41.20.04	TRANSFER GEARBOX DRAIN AND REFILL	TWIN SPEED TRANSFER CASE	0.3	USED WITHINS

GENERAL EQUIPMENT

EQUIPMENT NAME
Land Rover diagnostic equipment

PART(S)

STEP	PART NAME	QUANTITY
Filling Step 5	Transfer case drain plug washer	1

DRAINING

NOTE:

Some variation in the illustrations may occur, but the essential information is always correct.

transmissionmanuals.com

1. **WARNING:**

   Do not work on or under a vehicle supported only by a jack. Always support the vehicle on safety stands.

   Raise and support the vehicle.

2. Position a container to collect the fluid.

3. **CAUTION:**

   Make sure that the area around the component is clean and free of foreign material.

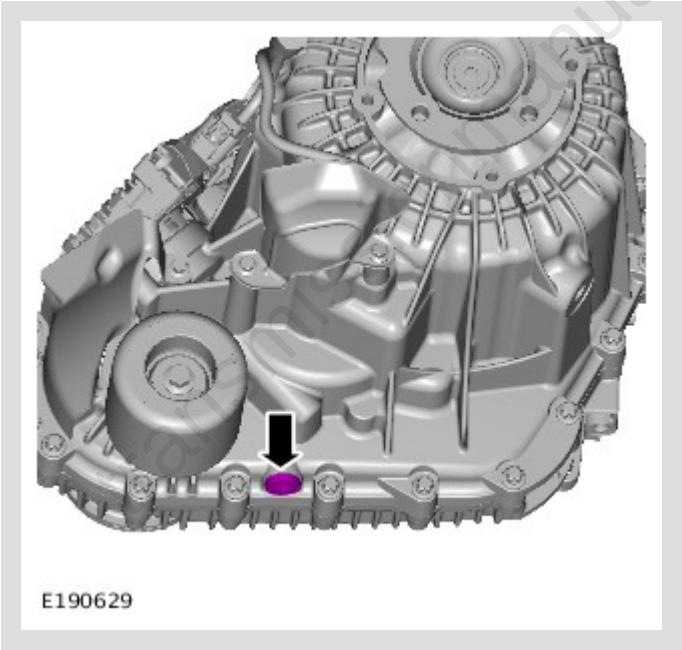

   Remove and discard the sealing washer.

4. Allow the fluid to drain.

FILLING

1.

NOTE:

Make sure that all the component mating faces are clean.

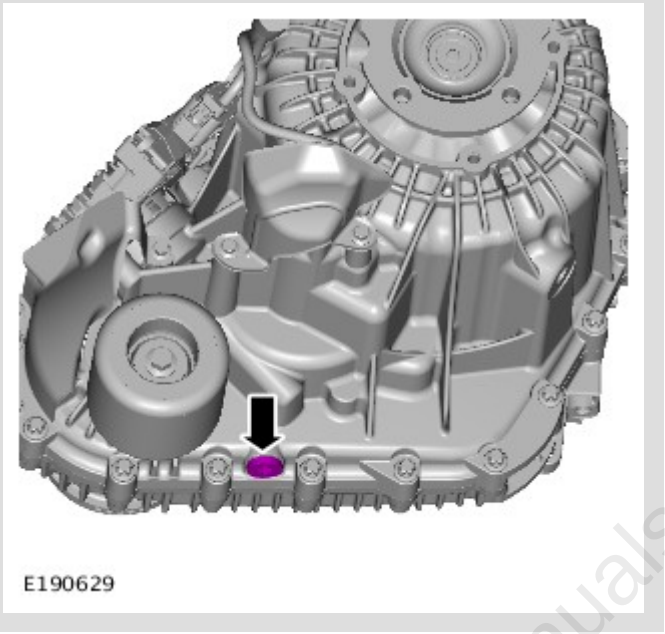

Install a new sealing washer.

Torque: **28 Nm**

2.

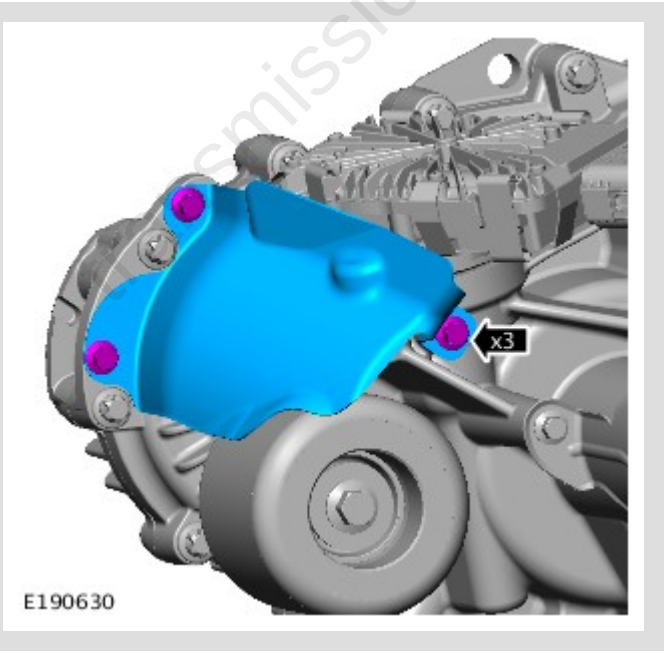

transmissionmanuals.com

3.

CAUTION:

Make sure that the area around the component is clean and free of foreign material.

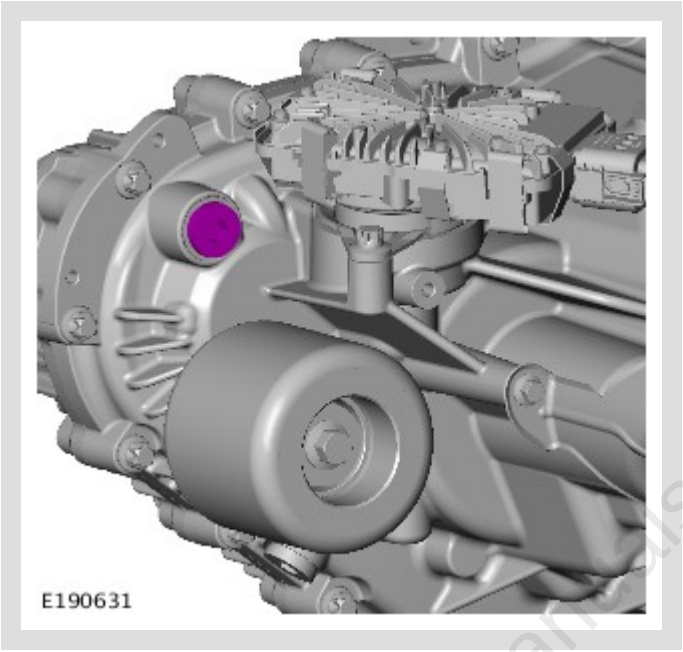

Remove and discard the sealing washer.

4. Refill transfer case with the recommended fluid, until the fluid is level with bottom of filler/level plug hole.
Refer to: Specifications (308-07C, Specifications).

transmissionmanuals.com

5.

NOTE:

Make sure that all the component mating faces are clean.

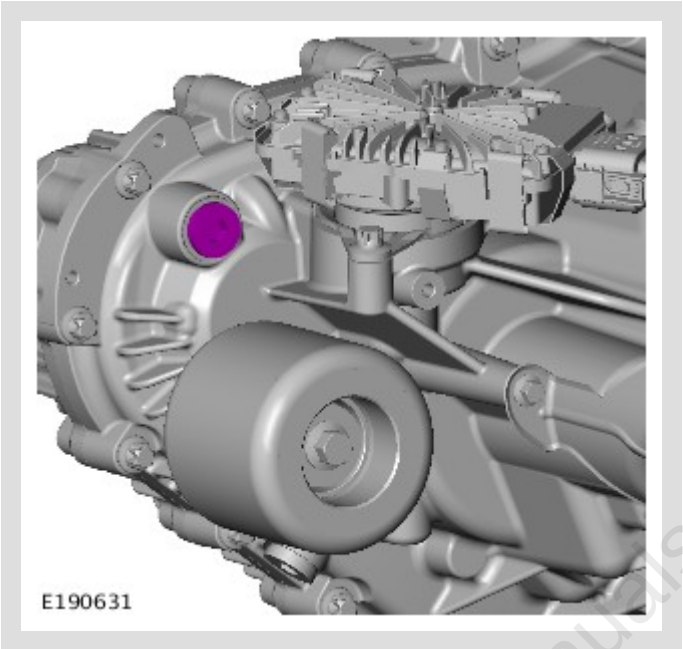

Install a new sealing washer.
Renew Part: *Transfer case drain plug washer* *Quantity:* *1* .
Torque: **28 Nm**

6.

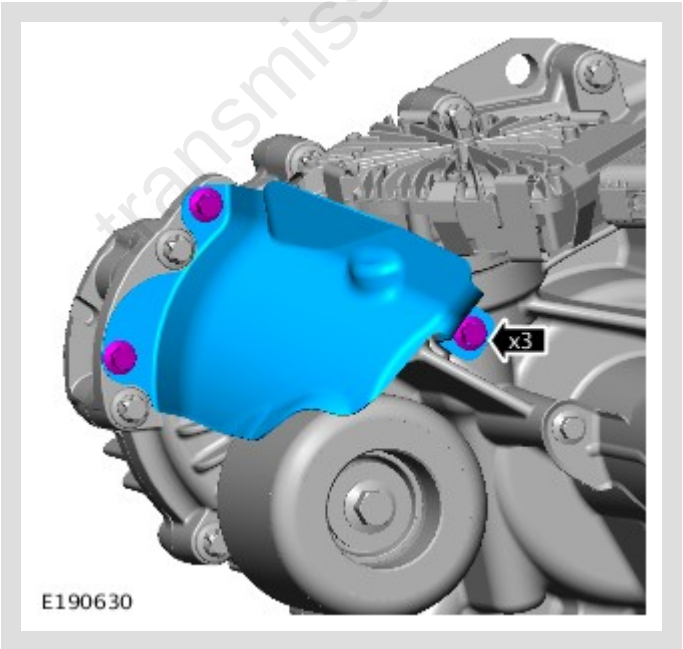

Torque: **8 Nm**

7. Using the diagnostic tool, re-calibrate the transfer case.
General Equipment: Land Rover diagnostic equipment

transmissionmanuals.com

transmissionmanuals.com